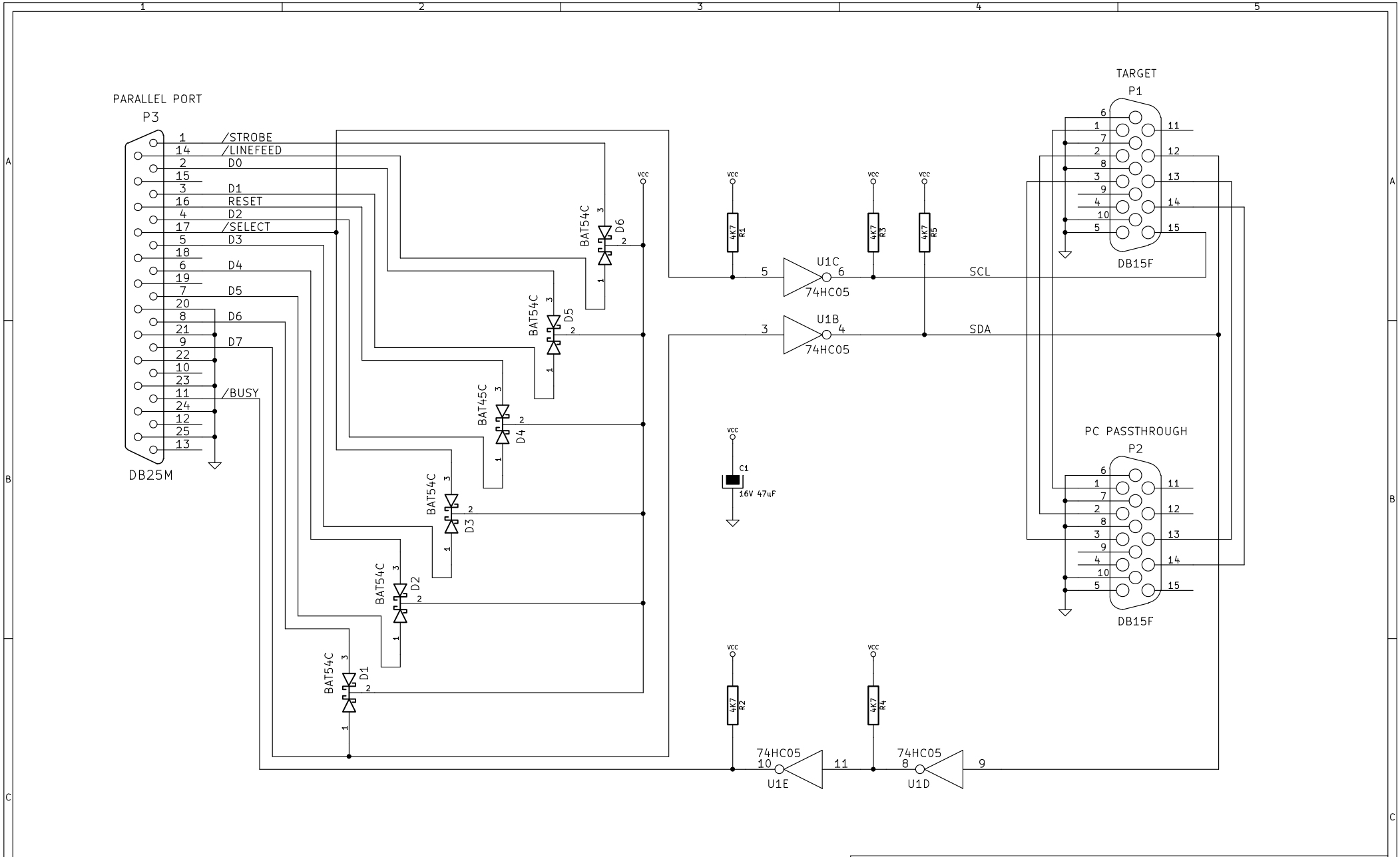

Matthew Millman		
File: ddcparallel.sch		
Sheet: /		
Title: Parallel DDC adapter		
Size: A4	Date: 10 may 2014	**Rev:**
KiCad E.D.A. eeschema (2013-07-07 BZR 4022)-stable		Id: 1/1